ISSN 2395-1621

Design and Development of Coconut Dehusking Machine for Marginal Farmers and Small Scale Coir Industry

#1Rahul Sabale, #2Dr. K. P. Kolhe

1sabalerm@gmail.com

3skishor75@gmail.com

#12Mechanical Engineering Department, SPP University

ABSTRACT

India is the world's third largest producer of coconut after the Philippines and Indonesia. India alone accounts for about 70% of the world production of coir and coir products. The total output of coir and coir products in India is estimated to be around Rs.1500.00 crore including exports of Rs.350.00 crore. All the parts of coconut orchard such as coconut husk, shell, copra, coconut water are useful. Coconut husk is used in coir industry, shell as a fuel, copra as food, coconut water as nutritious liquid. There are many farm equipment's and tools which are developed for the post harvesting operation of horticultural crops. The dehusking of a coconut is regarded as the most time consuming, tiring, and difficult operation to perform and involves much human drudgery.

Many attempts has been done to perform coconut dehusking manually as well as mechanized. Dehusking with traditional hand tools like machete or a spike depends on the skill of worker and involves training. Nowadays there is shortage of such skilled workers. The mechanized or the power operated machines are developed to eliminate the drawbacks of manual tools. Such manual tools and machines are developed all over the world and a very few have become popular, rest got vanished due to their limitations. The reasons for the failure of these tools include unsatisfactory and incomplete dehusking, breakage of the coconut shell while dehusking, spoilage of useful coir, greater effort needed than manual methods, etc. This present work aims to design and develop a semiautomatic coconut dehusking machine with eliminating the above mentioned drawbacks of the existing tools and machines. The machine conceived shall have main parts like deshuking unit mounted on a frame with electric motor as a power source along with speed reducing unit. The dehusking unit shall have a pair of cylindrical rollers with tynes (cutting pins) on its surface. These rollers will rotate in opposite direction with different speeds so that the tynes will penetrate into the husk and tear it away from the shell. The proper tearing of husk from shell occurs when the coconut offers good mesh with the tynes and it depends on the depth of insertion of nut into rollers and profile of tynes. As coconuts varies considerably in size and shape there is a need of adjustment in distance between pair of rollers for desired depth of insertion. Also the suitable profile of tynes is required for effective dehusking. These tynes shall be attached to the cylinders with fasteners so that replacement can be easily done.

ARTICLE INFO

Article History

Received :18th November 2015

Received in revised form :

19th November 2015

Accepted : 21st November , 2015

Published online :

22nd November 2015

Keywords— **Tynes, Dehusking Unit, Peeling Strength, Penetration Strength, Coir Industry.**

I. INTRODUCTION

Coconut (cocosnucifera) is one of the world's most useful and important perennial plants. The coconut fruit is made up of an outer exocarp, a thick fibrous fruit coat known as husk; underneath is the hard protective endocarp or shell [2].

The coconut palm is widely cultivated in the tropics. India is the world's third largest producer of coconuts after the Philippines and Indonesia. Other producers are Thailand, Malaysia, Papua New Guinea and the Pacific Islands. With coconut plantations extending over

© 2015, IERJ All Rights Reserved

more than a million hectares, India produces about 5500 million nuts a year. Copra produced in the country is about 0.35 million tons and India accounts for about 50% of the world trade in coir

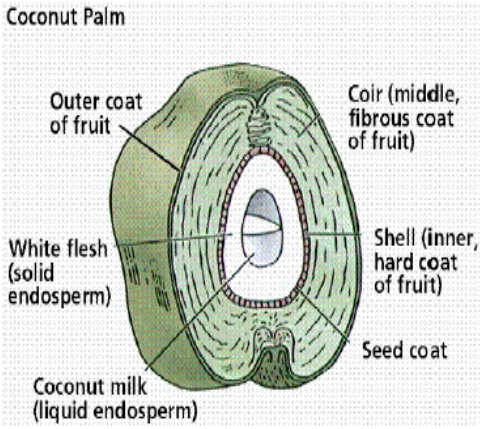

Fig.1 Parts of Coconut

Coconut plantations are mostly concentrated in the coastal and deltaic regions of south India. In India, the crop is produced mainly by small and marginal farmers who number about 5 million. The average size of holding is as small as 0.25 hectares. With agricultural labour problems worsening and water resources dwindling, more and more plantation acreage is being converted from arca to coconut since the latter is easier to grow and more remunerative [6].

Coconut production plays an important role in the national economy of India. According to figures published in December 2009 by the Food and Agriculture Organization of the United Nations, India is the world's third largest producer of coconuts, producing 10,894,000 tons in 2009.

Traditional areas of coconut cultivation are Kerala (45.22%), TamilNadu (26.56%), Karnataka (10.85%), Andhra Pradesh (8.93%) and also Goa, Orissa, West Bengal, Pondicherry, Maharashtra and the island territories of Lakshadweep and Andaman and Nicobar [1].

Almost all the parts of coconut are useful. The meat of immature coconut fruit can be made into ice cream while that of a mature coconut fruit can be eaten fresh or used for making shredded coconut and livestock feed. Coconut milk is a refreshing and nutritious drink while its oil is use for cooking and making margarine. Coconut oil is also very important in soap production. The shell is used for fuel purpose, shell gasifier as an alternate source of heat energy. The husk yields fibres used in the manufacture of coir products such as coir carpets, coir geo-textile, coir composite, coir safety belts, coir boards, coir asbestos and coir pith [2]. Coir is a versatile natural fiber extracted from mesocarp tissue, or husk of the coconut fruit. Generally fiber is of golden color when cleaned after removing from coconut husk. Coir is the fibrous husk of the coconut shell. Being tough and naturally resistant to seawater, the coir protects the fruit enough to survive months floating on ocean currents to be washed up on a sandy shore where it may sprout and grow into a tree, if it has enough fresh water, because all the other nutrients it needs have been carried along with the seed.

These characteristics make the fibers quite useful in floor and outdoor mats, aquarium filters, cordage and rope, and garden mulch. The husk contains 20% to 30% fiber of varying length [1]. Nowadays, the use of natural fibre reinforced composite is gaining popularity in automotive, cosmetic and plastic rubber applications because it offers an economical and environmental advantage over traditional organic reinforcements and fillers. The features of coir fibre from coconut husk such as durability, relatively water-proof and resistance to damage by salt water and microbial degradation makes it popular in fibre reinforced composite applications. It is also revealed that both fibre length and fibre orientation distribution play very important role in its mechanical properties; increase in length of coir fibre, increases the flexibility of the composite product like seat cushions for automobiles. Thus, there is need for machines that can extract coconut husk/fibre without distorting its length [2].

The processing of coconuts after they are harvested involves dehusking, which at present is labour intensive. Dehusking the coconuts without damaging the useful coir is an art only skilled workers can perform. The husk around the shell exists in three distinct lobes. Although the nuts follow the same general pattern in their structure, they vary widely in size (viz. length, girth, thickness of husk and shell) depending on the species [6]. In the traditional way that coconuts are dehusked, the sharp blade tip pierces the husk with an impulsive force. Then the twisting action given to the tool or to the coconut will tear and peel off the husk from the shell. This requires the generation of piercing force sufficient to pierce through the husk, followed by a peeling force to remove the husk from the shell, in addition to a holding force acting on the shell of the coconut while the husk is torn from the shell. This is followed by shearing the husk from the shell, if it is still attached to the shell at some points [6].

II. LITERATURE SURVEY

A. Coconut husk removing tool

This tool works on the principle of twin blades having wedge placed upright [8]. It consists of two blades one is fixed and the other is movable. These blades are connected to a rod. The movable blade has a handle on it. The tearing force is applied with the help of this handle. This is the main problem associated with coconut husk removing tool. The coconut is placed in the bowl and the blades are penetrated into husk.

© 2015, IERJ All Rights Reserved

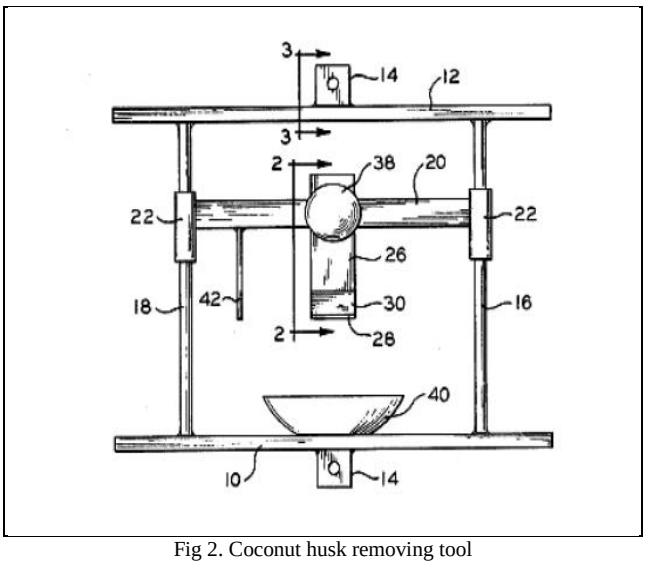

Fig 2. Coconut husk removing tool

B. Foot operated coconut dehusking tool

It is also called as coconut cracker which was developed in Japan. It is tool consisting of 2blades[7]. The coconut has to be forced into blades so as to impale.

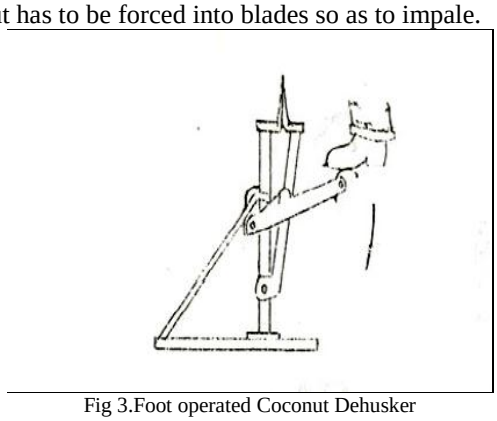

Fig 3.Foot operated Coconut Dehusker

The blades are operated on the force exerted by foot. The blades are also attached to the spring. When the force is released the blades goes to their original position. It requires 4 to 5 repetitions for complete dehusking the coconut. Firstly the coconut is striked onto the blades and then by foot the forced is applied so that the blades are opened i.e. moves away tearing the husk from the shell of coconut. When the force is removed due to inertia in spring the blades are forced to return to the own position. Such operation is a tiring and time consuming operation. Also when force has to applied by foot hence the operator loses his stabiblity and it may lead to accident.

C. Coconut Fiber removing Apparatus

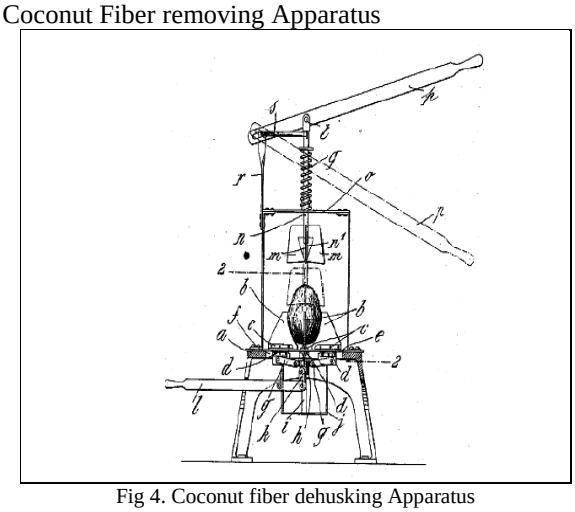

Fig 4. Coconut fiber dehusking Apparatus

The coconut fiber removing apparatus consists of the cutting edges which are located at the top of coconut[9]. These blades are movable, they can move downwards as well as away. They are moved towards and away simultaneously upto 90 degree. These blades are attached to the rod and the rod can be lowered and raised with a help of handle. The coconut is placed on the lower part of machine which has bladed on it. These blades at the bottom can also be adjusted and hence it helps in achieving proper position. The process of dehusking involves the impale of blades into husk of coconut by lowering the rod with the force and then moving the blades outward. In this way the dehusking is carried out. But it involves large force to impale the husk at eye and some other parts. So manually to generate such a large force is limitation of this apparatus.

D.CoconutDehusking Machine

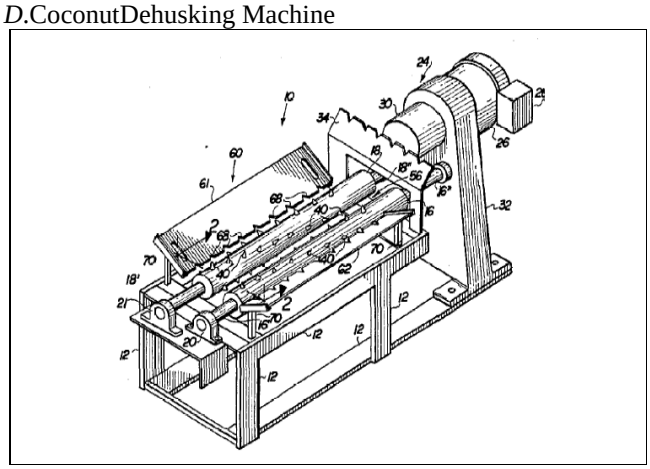

Fig 5. Coconut Dehusk Machine

A Coconut dehusking machine involves or consists of two cylindrical rollers which has cutting tynes over them [10]. The coconut is placed onto these rollers, the rollers rotates in opposite direction with different speed. The spikes on one roller holds the husks while spikes on other tears the husk from the shell. Such a machine is bigger in size due to its long rollers. Large force is required due to small mechanical advantage and hence consumes large power.

E. Mini Coconut DehuskerMini coconut dehusking is like that of coconut spanner [7]. It can be regarded as the further version of coconut spanner. Similar to coconut spanner it has long legs which are bend at the end. This bend in legs helps to hold it proper and force can be applied easily. It also consists of the pillar to which the tongs are connected.

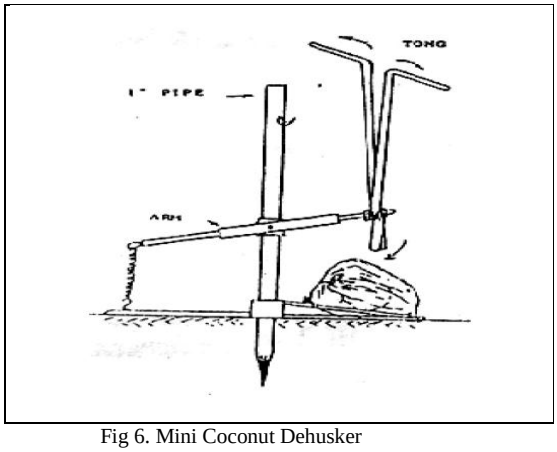

Fig 6. Mini Coconut Dehusker

© 2015, IERJ All Rights Reserved

Also a spring is attached to the link which is hinged to pillar. The blades are impaled into the husk of coconut and outward force is exerted on blades which leads to loosening of the husk from coconut. Such a operation has to be repeated three to four times so that the husk is removed from coocnut. The spring helps to regain the original position of handles so that the operation can be repeated quickly. Again this operationinvolves the bending of operator and straighten up which is not acceptable.

F.Coconut Husking Machine

Titmas and Hickish developed a machine to dehusk the coconut is called as coconut husking machine [7]. It consists of twin blades which are mounted on the wooden support and it stands upright when placed over a platform. The coconut is impaled onto the blades with hands and then the force is applied by a lever on which force can be applied with the foot. For the complete removal of husk such a operation has to be repeated three or four times.

A tension spring attached with the movable blade helps in retaining the original position. Such a springing action can lead to injury if the foot is slipped while applying force. While applying the force the operator has to stand on one foot and this destabilizes his posture which is not accepted. Such a limitation of this machine prevented its popularity and use.

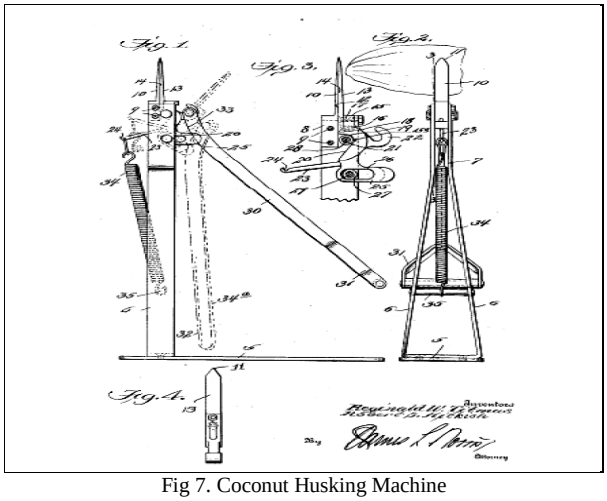

Fig 7. Coconut Husking Machine

G.Tool to dehusk a Coconut

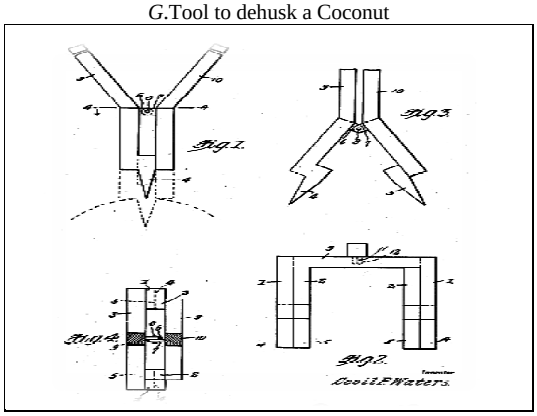

Fig 8. Coconut Dehusking Tool

It is very simple in construction [11]. It has two blades which are penetrated or impaled into the husk of the coconut and then force is applied to make the blades to move outward to loosen the fiber. Such a operation needs to be performed for three to four times to completely dehusk the coconut.

H.Keramithra Coconut Husking Tool

Keramithra is very popular in south India [4]. It is widely used there to dehusk the coconut. Such a tool consists of two blades one is stationary to the upright column and the other is movable. The movable blade is attached to the handle. As force is applied on the handle the jaw rotates which helps in dehusking. While dehusking the coconut is impaled onto the blades in closed position, and then handle is lifted up to dehusk.

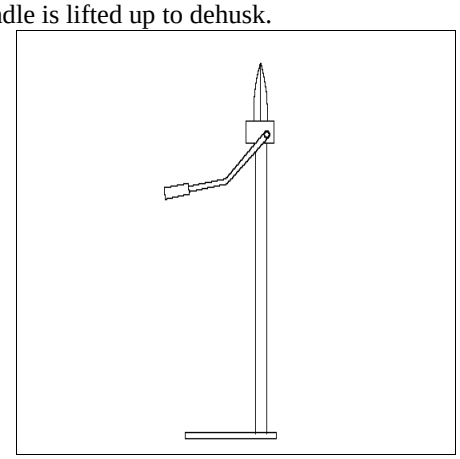

Fig 9. Coconut Husking Tool

Such a repetition or two to three times dehusks the coconut completely.

I.Hydraulic Coconut Dehusking

It is very popular in the power operated coconut dehuking machines [7]. Such a machine involves large force. It consists of movable jaws which are hydraulically operated. These jaws can be lowered and moved away from the center. The coconut is placed on the bottom base. The jaws are penetrated into the eye of the coconut with a reaction support from the base. Once impaled into the husk of coconut the jaws are forced to move outwards and the base on which the coconut is fixed is pushed in upward direction. Due to these movements the husk is separated from the shell of coconut.

Fig 10.Hydraulic Coconut Dehusking Machine

This type of hydraulic dehusking machine is suitable for mass production. Its cost is more and requires skilled operator.

J.Mechanical Coconut Husking Mechanism

The mechanical coconut husking mechanism consists husking mechanism, one inlet and one outlet [12]. The husking mechanism has two rollers on which curved blades are mounted. These rollers are powered by electric motor. The operation starts with inserting the coconut into the inlet. The coconut is then comes in contact with the rollers with curved blades onto it.

© 2015, IERJ All Rights Reserved

Fig11.Mechanical Dehusking Machine

This blade gets impaled into husk and due to roller movement the husk is removed from the shell. The rollers are spiked as well as spring loaded.

K.Rotary Coconut Dehusker

As the name suggests this type of dehusker has a rotary arrangement of blades [7]. The blades are fixed over the drum as well as on the concave surface. It has one inlet with bigger size as compared with the outlet with smaller size. It is suitable for the large scale dehusking. When the coconut is placed in the space between drum and concave surface it is pressed and moved forward. The blades on the drum punctures or gets inside the husk on coconut and shear force peels it off.Some coconuts are completely dehusked and some are only punctured. Such a coconut then requires the secondary handling to remove the husk from its shell.

L.Twin Blade Type Coconut Dehusking Machine

The twin blade type power operated machine to dehusk coconut was developed with a intension to satisfy the small scale farmers [7].

Fig12.Twin Blade Type Coconut Dehusking Machine

It has two blades one is fixed the other is movable. The movement of the movable blade is achieved by a cam and follower mechanism. The movable blade rotates and moves away from the fixed blade. The rotation and its juxtaposed positions were set by designing the dwell period of the cam and follower. Such a arrangement requires 12-20 seconds to remove the husk of coconut completely. Its limitations are it requires skill operator and size and cost are high.

M.CoconutDehusker

The Coconut Dehusker is a manually operated tool. It consists of three set of blades each consisting of 3 blades. Upper unit is having 2 set of blades and lower half is having one set of blades. The upper one set of blades will first penetrate the husk, and then other upper set of blade will peel the husk away.

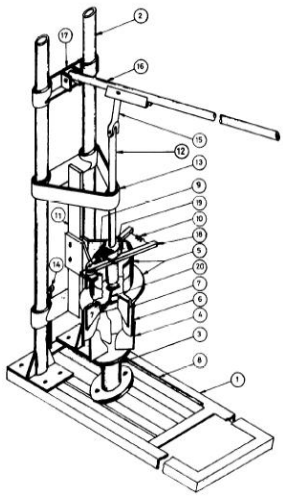

Fig 2.13 Hydraulic Coconut Dehusking Machine

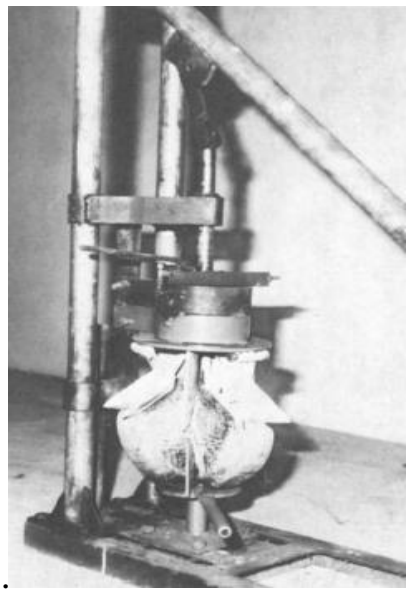

Fig 2.14 Hydraulic Coconut Dehusking Machine

The lower set of blades will offer reaction as forces are applied. The dehusking force for this mechanism is applied with a lever by hand. Two workers are involved in this machine to dehusk the coconuts. One will apply force on lever and other will insert and remove the coconut after the dehuking.

III.WORKING PRINCIPLE METHODOLOGY

The coconut dehusker shall be a semiautomatic power operated machine consisting of the following parts,

1. Electric motor as a power source
2. Power transmitting train
3. Speed reducing unit
4. Dehusking unit
5. Cylinder intermediate distance adjustment mechanism
6. Supporting Frame

These elements mentioned above will be placed over the supporting frame. To transmit the power from motor to cylindrical rollers gear and pulley transmission system shall be incorporated. The dehusking unit is consisting of cylindrical rollers attached with tynes (cutting pins) over the surface. The coconut is placed in the intermediate distance

© 2015, IERJ All Rights Reserved

between rolling cylinders. The rollers will rotate in such a way that there will be tearing of coconut fiber from the shell. With proper meshing of fiber with tynes effective dehusking is achieved with consuming lesser time.

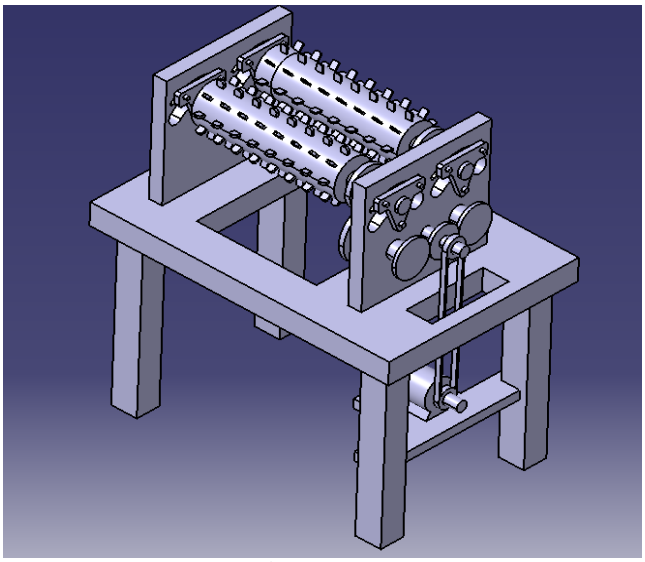

Fig 15. Cad Model of Coconut Dehuking Machine

The line diagram of the model described above with tentative dimensions is prepared as follows.

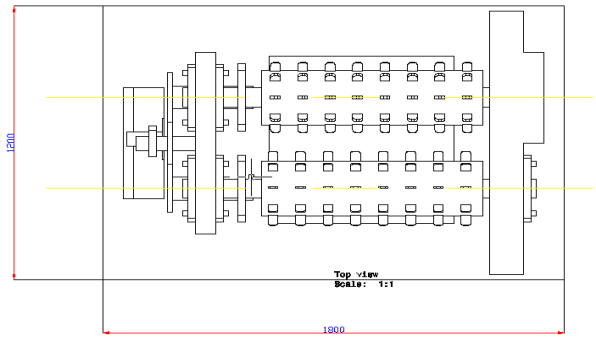

Fig 16. Top view of Coconut Dehuking Machine

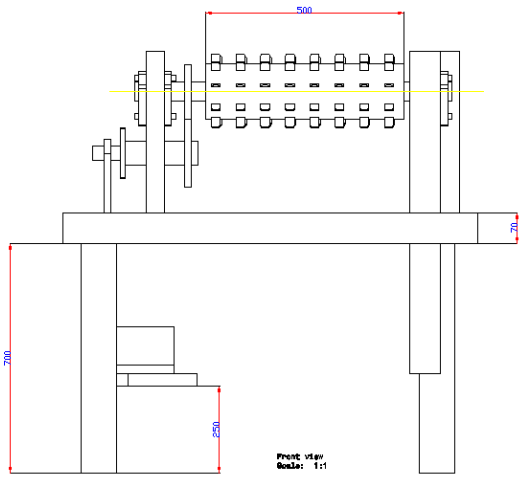

Fig 17. Front view of Coconut Dehuking Machine

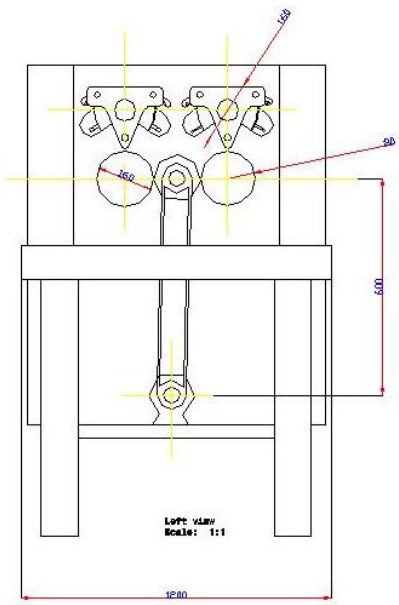

Fig 18. Side view of Coconut Dehuking Machine

The shape and size of coconut is considered while designing the machine. From the studies conducted on the green and dry coconuts collected from the midlands of the two districts of Ernakulam and Kottayam of Kerala, India, the physical properties of coconut are as follows.

Table No.1 Physical Properties of Coconut [4]

Particulars	**Dry Coconut**
Shape	Ovoid
Length, *mm*	210-270
Diameter, *mm*	160-206
Weight, *kg*	0.62-1.25
Shell Diameter, *mm*	80-120
Husk Thickness - at pedicel end, *mm*	62
Husk Thickness - at apex end, *mm*	34
Husk Thickness - 1/4th distance from pedicel end, *mm*	32
Husk Thickness - 1/2th distance from pedicel end, *mm*	24
Husk Thickness - 3/4th distance from pedicel end, *mm*	28

The force estimates using a Universal Testing Machine are as follows:

Table No.2 Force Estimates of Coconut Husk [6]

Condition of coconut	*Force for piercing (kg)*	*Force for peeling (kg)*
Raw (green colour)	230–250	35–40
Moderately dry	250–280	35–45
Dry (brown colour)	280–300	35–45
Completely dry (greyish colour)	300–320	40–45

The average dimensions of coconut are found as follows

1. Shape : Ovoid
2. Dimensions : 300 mm long X 200 mm wide
3. Thickness of fiber : 20 to 40 mm

© 2015, IERJ All Rights Reserved

4. Weight : 1 Kg
5. While dehusking the coconut husk removes as 3 parts, each of width : 40 to 80 mm

3.1 Design of Various Element of Coconut Dehusker shall be carried out as follows

A) Design of Cutting Tynes:

The adhesion between fibers in the husk is greater than that between the shell and the husk; hence separation occurs at the husk-shell interface. The thickness of fiber is in the range of 20 to 40mm. The dimension of tynes should be so selected that to get effective penetration with coconut.

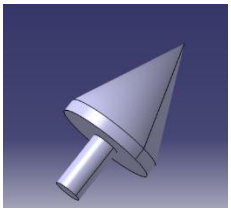

Fig 16. Cad Model of Tyne or Cutting Pins

The tynes can be attached to cylindrical rollers either by welding or by using fasteners. The advantage of using fasteners is that the damaged tynes can be easily replaced.

B) Design of Cylindrical Rollers:

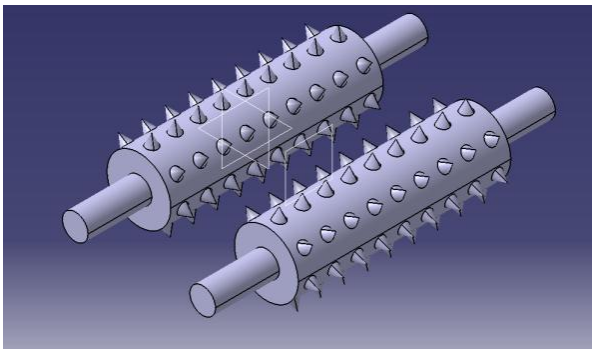

Fig 17. Cad Model of Cylindrical Rollers

The dimensions of cylinders are designed in a manner to obtain effective mesh with coconut husk. Assumptions used,

1. Coconut contacts with cylinder at an average angle of 30 degree contact sector.
2. The 1/6th of width of coconut should be inserted into the intermediate space between cylinders. (Approximately 30mm).
3. For proper meshing of coconut with cylinders, the diameter of cylinder is to be in the range of 160-180mm for an average size coconut.

C) Horizontal and Circular Pitch of tynes:

Both horizontal and circular pitch has to be designed. Horizontal pitch is the distance between tynes along the axis or length of cylinder. Circular pitch is the distance between tynes about the periphery of cylindrical roller. For selecting the horizontal pitch the average length of coconut is to be considered. It is found to be 300mm. The tynes are mounted on cylinder in such a way that optimum number of tynes should be in contact with the coconut. This will help in reducing the load on each tynes and increase efficiency of dehusking operation. For selecting circular pitch average width of coconut is found to be 200mm. Suitable number of tynes should be selected to have good mesh and effective dehusking.

D) Provision for Adjustment of Intermediate distance between rolling Cylinders:

As coconuts varies considerably in size and shape there is a need of adjustment in distance between pair of rollers for desired depth of insertion. For making such adjustment two radial slots are made into the vertical plates.

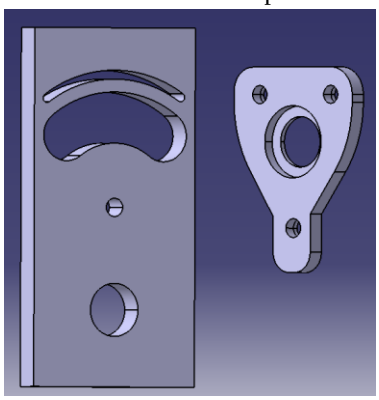

Fig 18. CAD Model of Vertical Plate and Swiveling Plate

The two gears are mounted on the shafts of cylindrical rollers, meshing with other gears fitted on a shaft in the vertical plate. So the roller gear and fixed gear are meshing with each other. The bearing on roller shaft is press fitted into the slot on swiveling plates. This bearing can move into the radial slot of vertical plates. Pair of swiveling plate is fitted with vertical plates by using 3 set of nut and bolts. One bolt at the bottom is inserted in a hole on vertical plate. Other two bolts are placed in radial slot of vertical plate into which these can be moved along the radial groove. Whenever we are interested to change the intermediate distance between the cylindrical rollers, the swiveling plates are loosened and shafts are shifted according to the size of coconuts and then as desired intermediate distance is achieved the 3 set of nut and bolts is tightened.

The cylinders with cutting tynes are mounted on shafts and are fitted into the radial slots by using bearings and swiveling plates. The bearings are press fitted into the swiveling plates. Each pair of these swiveling plates can be firmly attached to the vertical plates with nut and bolts.

For effective dehusking of coconut it should get good mesh with rollers. As coconut varies considerably in size and shape depending upon variety and maturity if the distance between rollers is constant for such a variation in size and shape effective dehusking would not be achieved. It is stated that 1/6th of width of coconut should be inserted into the intermediate space of cylinders i.e. approximately 30mm for effective dehusking. For that the shafts has to be

© 2015, IERJ All Rights Reserved

moved into the radial slots to make that desired change in distance between cylinders.

As the shaft is moved radially into the slot the gear on shaft will roll over the fixed meshing gear and when the desired intermediate distance between cylinders is obtained that position can be fixed with nut and bolts of swiveling plates.

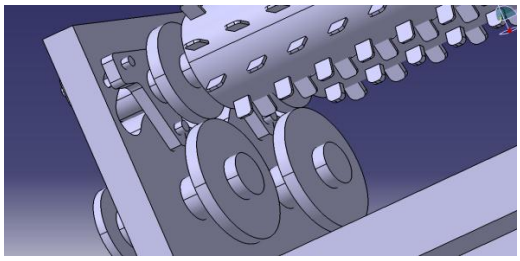

Fig 19.Adjustment in intermediate distance between shafts

E) **Power Transmission and Speed Reduction Unit**

The power from electric motor is transmitted to the rotating cylinders through pulleys and gears. Power should have less speed and high torque at the rotating cylinders and this is obtained by using a speed reduction gearbox. The gears and pulleys will be arranged in such a way that desired output is obtained by making use of readily available sizes of gears and pulleys, so as to keep the manufacturing cost low.

The composition of material for manufacturing different components of dehusker shall be selected as follows,

Sr No.	Component	Material	Composition
1.	Cutting Tynes	MS (heat treated tip of tynes)	C%-0.2max, Mn%-0.5.
2.	Cylinders	MS	C%-0.2max, Mn%-0.5.
3.	Swiveling Plates	MS Plate	C%-0.2max, Mn%-0.5.
4.	Supporting Structure	Angle Iron	-
5.	Seating of Motor	C. I. Plate	C%-0.4, Si-2%, Mn-1%, Cr-28, Ni-5%

IV. CONCLUSION

Coconut is regarded as a “tree of heaven” in kerala as it has numerous advantages. Coconut is grown on a large scale in India, this horticultural crop have become source of income and employment in many parts of southern states. All the parts of coconut earn revenue and some are even exported like coir products. Post harvesting operation of coconut is tedious job to perform, and involves much human drudgery. Skilled workers for coconut dehusking are diminishing these days. Many attempts have been made to mechanize this operation by developing various tools and even power operated machinery. The manual dehusking tools which are developed such as keramithra, foot operated dehusker are time consuming and may lead to injury due to lack in concentration while dehusking. Motor operated or mechanized dehusker which are developed needs to refined, their design has to be modified. While developing the dehusker cost, size and weight shall be minimized by incorporating changes in material and structure of machine. Hydraulic dehusker as mentioned in literature works satisfactorily but it requires skilled labour and it consumes lot time also hydraulic system has to go for frequent periodic maintenance for its satisfactory working. On the basis of literature the present work aims to develop a semi-automatic power operated coconut dehusking machine with eliminating the drawbacks of previously developed tools and machinery. The proposed machine makes use of rotating cylinders with cutting tynes attached over their surface, which rolls in opposite direction to remove the husk from the shell of coconut. A provision to adjust the distance between rotating cylinders is made to accommodate various sizes of coconuts due to change in variety and maturity. The cutting tynes are attached to the cylinders with fasteners so that easy replacement of damaged tynes is possible. Accordingly the proposed machine will be designed thoroughly, manufactured and tested.

REFRENCES

[1] Y. Prashant, C. Gopinath and VigneshRavichandran, “Design and Development of Coconut Fiber Extraction Machine” SASTech Journal Volume 13, Issue 1, April 2014.

[2] B. N. Nwankwojike, O. Onuba and U. Ogbonna, “ Development Of A Coconut Dehusking Machine For Rural Small Scale Farm Holders” International Journal Of Innovative Technology & Creative Engineering (Issn: 2045-8711) Volume 2, Issue 3, Mar 2012.

[3] Jibin Jacob, Rajesh Kumar S, “Design and Fabrication of Coconut Dehusking Machine” IEEE Conference 2012.

[4]Abi Varghese and Jippu Jacob “A Study on the KAU Coconut Husking Tool” International Conference on Magnetics, Machines & Drives IEEE Conference 2012.

[5]Mr.VinodP.Sakhare, Mr.KetanK.Tonpe and Dr.C.N.Sakhale, “Performance Analysis of Hydraulically Operated Coconut De-husking Machine” Journal of Emerging Technologies and Innovative Research (JETIR) Volume 1, Issue 2, Mar 2013.

[6]B. T. Nijaguna “Coconut Dehusker” Journal of Food Engineering 8 (1988) 287-301.

[7]AbiVargheser and Jippu Jacob, “A Review Of Coconut Husking Machines” International Journal of Design and ManufacturingTechnology Volume 5, Issue 3, September 2014.

[8]Edward D. Hill, “Coconut Husk Removing Tool” United States Patent 4,383,479 May 17, 1983.

© 2015, IERJ All Rights Reserved

[9]Rene Marot, "Apparatus for Removing Fiber From Coconuts Or The Like" United States Patent 983,631 Feb. "3, 1911
[10]Chandra Dinanath, "Coconut Dehusking Machine" United States Patent 4,708,056 Nov. 24, 1987.
[11]C. P. Waters, "Cocoanut Husk Removing Tool" United States Patent 2,472,354 June 7, 1949.

© 2015, IERJ All Rights Reserved